APPROVED

REVISIONS				
ZONE	REV.	DESCRIPTION	DATE	APPROVED

INFORMATION IN THIS DRAWING PROVIDED FOR REFERENCE ONLY

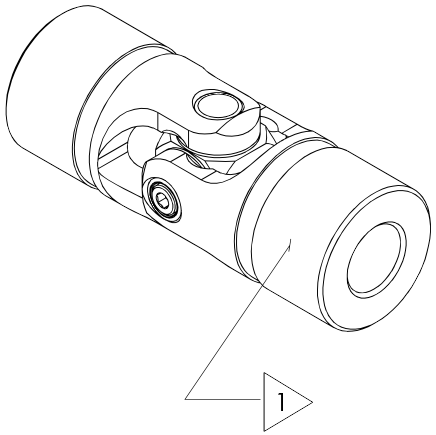

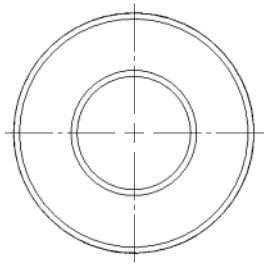

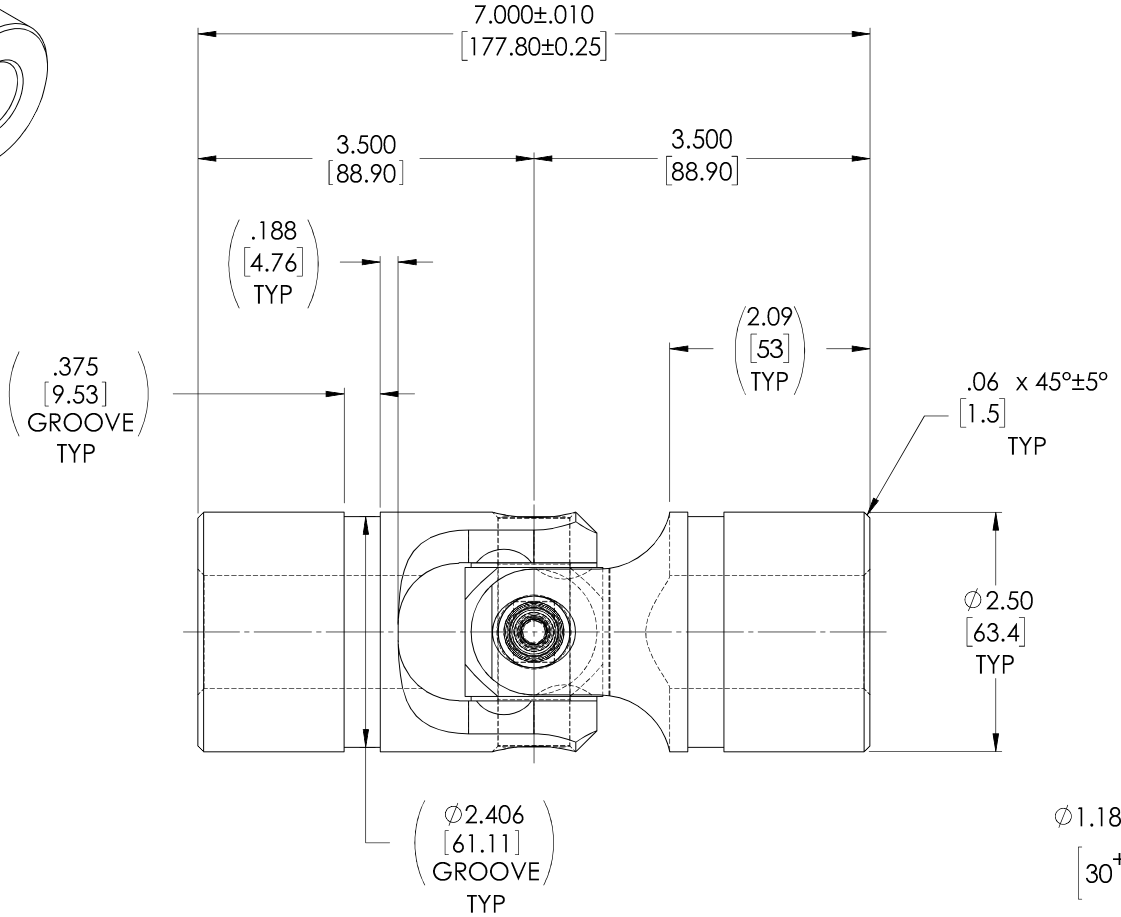

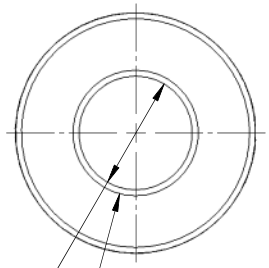

$\varnothing 1.1811^{+.0008}_{-.0000}$

$\left[30^{+0.021}_{0}\right]$

∅1.31 X 90° ±10° INCL.
[33.2]

TYPICAL BOTH ENDS

NOTE(s), UNLESS OTHERWISE SPECIFIED.

1 MARK ASSEMBLY w/ "BELDEN" LOGO, PART NUMBER, REVISION LEVEL (IF ANY), DATE OF MANUFACTURE (MO/YR). & BELDEN JOB No.

(2) LUBRICATE WITH LUBRIPLATE® PRODUCT No. 1200-2 NLGI GRADE 2, AW/EP, LITHIUM GREASE.

(3) TORQUE M8x1.25 SOCKET HEAD CAP SCREW TO 20 FT-LBS.

(4) REF., MAXIMUM OPERATING ANGLE: 45°.

(5) REF., MATERIAL: YOKES... TYPE 303 STAINLESS STEEL,
BLOCK & PINS... TYPE 416 STAINLESS STEEL,
CAP SCREW.... TYPE 18-8 STAINLESS STEEL,
HEX LOCKNUT... TYPE 18-8 STAINLESS STEEL.

DO NOT SCALE DRAWING

UNLESS OTHERWISE SPECIFIED
CHAMFER ALL HOLES
BREAK ALL SHARP CORNERS
DE-BURR ALL FEATURES
TURNED SURFACES: 63
MILLED SURFACES: 125

PROPRIETARY AND CONFIDENTIAL
THE INFORMATION CONTAINED IN THIS DRAWING IS THE SOLE PROPERTY OF BELDEN UNIVERSAL. ANY REPRODUCTION IN PART OR AS A WHOLE WITHOUT THE WRITTEN PERMISSION OF BELDEN UNIVERSAL IS PROHIBITED.

STANDARD TOLERANCES
UNLESS OTHERWISE SPECIFIED
DIMENSIONS ARE IN INCHES [mm]
ANGULAR MACHINED: ±1.0°
FRACTIONAL: ±.015"
TWO PLACE DECIMAL: ±.010"
THREE PLACE DECIMAL: ±.005"
FOUR PLACE DECIMAL: ±.0005"
CONCENTRICITY: .0025" T.I.R.
ALL HOLES TO BE LOCATED ON CENTERLINE (℄) WITHIN .005" T.I.R.
INTERPRET GEOMETRIC TOLERANCES I.A.W. ASME Y14.5

MATERIAL: STAINLESS STEEL
HEAT TREAT: SEE DETAIL DRAWINGS
FINISH: NONE

	INITIALS	DATE
DRAWN	JP	06JUN19
CHECKED	RNK	06/24/2019
ENG APPR.	RNK	07/12/2019
MFG APPR.		
QC APPR.		

COMMENTS:

Belden Incorporated
www.beldenuniversal.com

TITLE: ASSEMBLY, UNIVERSAL JOINT

SIZE: A | DWG. NO.: UJ-SS2500x30 | REV: A

SCALE: 1:1 | WT (Lbs): 6.817 | SHEET 1 OF 2